GE AV CRV

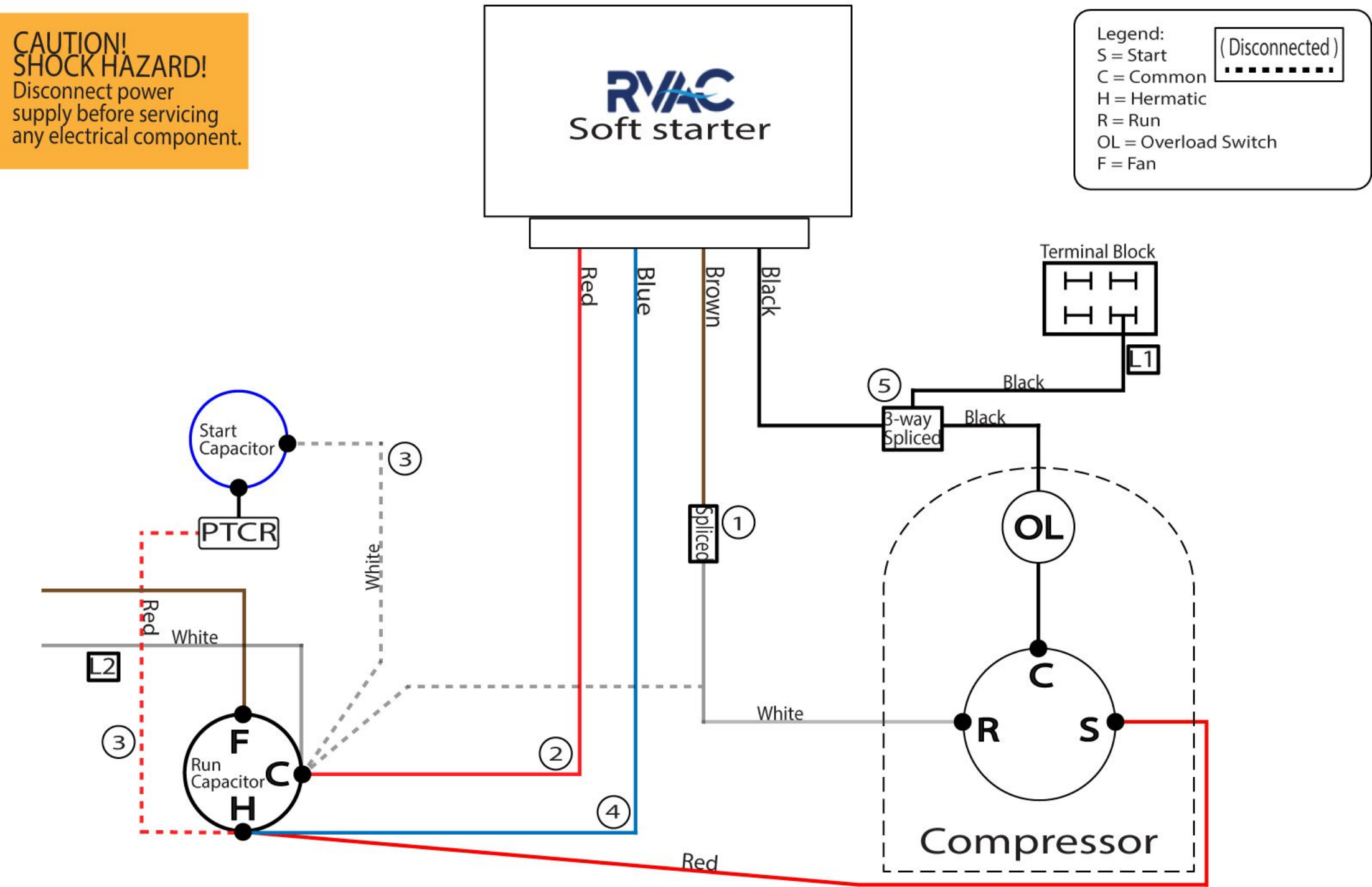
CAUTION!
SHOCK HAZARD!
Disconnect power supply before servicing any electrical component.
RVAC
Soft starter
Legend:
S = Start
C = Common
H = Hermatic
R = Run
OL = Overload Switch
F = Fan
(Disconnected)
Red
Blue
Brown
Black
Terminal Block
L1
Black
5
3-way Spliced
Black
Start Capacitor
3
PTCR
White
Spliced
1
OL
Red
White
L2
C
White
R
S
3
F
Run Capacitor
C
H
2
4
Red
Compressor