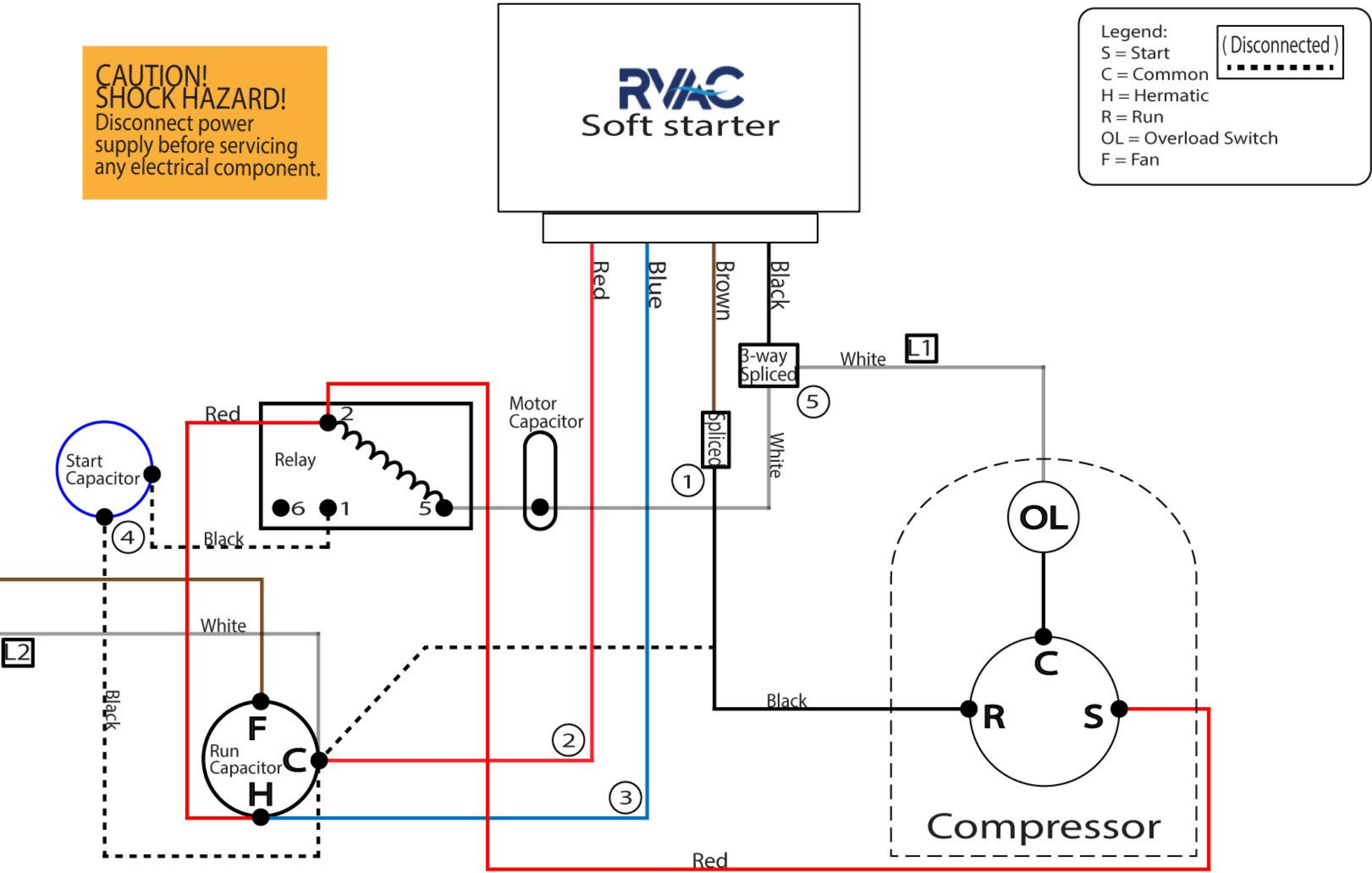Intertherm SCH RV A Series